THIS DOCUMENT AND THE INFORMATION
IT CONTAINS IS THE PROPERTY OF EMTEQ INC.
AND MAY NOT BE USED IN ANY WAY WITHOUT
THE EXPRESS WRITTEN CONSENT OF EMTEQ INC.

REV	REVISION	DATE	ER #	INTL
F01	UPD PER VENDOR REDLINE	08/20/2014	1194-14	ASL

DIMENSIONAL INFORMATION

PART NO.	"A"	"B"	"C"	"D"	"E"	CABLE ASS'Y.(REF)
BMR100-2	1.04 (26.4)	1.65 (41.9)	0.38 (9.7)	0.56 (14.2)	0.156 (3.9)	ES-105-53
BMR125-075-2*	1.04 (26.4)	1.83 (46.5)	0.38 (9.7)	0.56 (14.2)	0.215 (5.5)	ES-105-67
BMR130-2	1.04 (26.4)	1.83 (46.5)	0.38 (9.7)	0.56 (14.2)	0.215 (5.5)	ES-105-19
BMR165-2	1.04 (26.4)	1.83 (46.5)	0.38 (9.7)	0.56 (14.2	0.25 (6.4)	ES-105-19
BMR175-075-2*	1.04 (26.4)	1.75 (44.5)	0.38 (9.7)	0.56 (14.2	0.215 (5.5)	ES-105-67
BMR195-2	1.04 (26.4)	1.75 (44.5)	0.38 (9.7)	0.56 (14.2)	0.25 (6.4)	ES-105-19
BMR205-2	1.04 (26.4)	1.83 (46.5)	0.38 (9.7)	0.56 (14.2)	0.297 (7.5)	ES-105-19
BMR225-2	1.04 (26.4)	1.75 (44.5)	0.38 (9.7)	0.56 (14.2)	0.297 (7.5)	ES-105-19
BMR240-2	1.04 (26.4)	1.75 (44.5)	0.38 (9.7)	0.56 (14.2)	0.297 (7.5)	ES-105-19
BMR500-2	1.17 (29.7)	2.17 (55.1)	0.56 (14.2)	0.56 (14.2)	0.556 (14.1)	ES-105-61

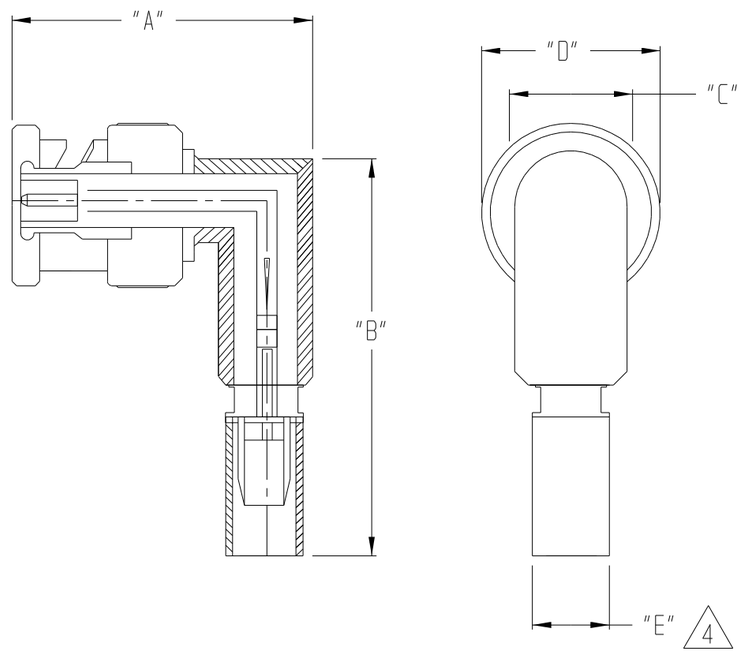

SPECIFICATIONS:

1) ELECTRICAL
   IMPEDANCE: 50 OHMS
   75 OHMS *
   FREQUENCY RANGE: 0 TO 4 GHZ
   VOLTAGE RATING: 1,000 V RMS
   DIELECTRIC WITHSTANDING VOLTAGE: 1,500 V RMS
   INSULATION RESISTANCE: 5,000 MEGOHMS MIN

2) MECHANICAL
   TERMINATION STYLE: INNER CONTACT - CRIMP
   OUTER CONTACT - CRIMP
   TEMPERATURE RANGE: -65° C TO + 165° C
   FINISHES:
   BODY FINISH: PROPRIETARY NICKEL
   CONTACT FINISH: GOLD PLATED PER MIL-G-45204

3) DESIGNED IN ACCORDANCE WITH MIL-C-39012 STANDARDS.

4 DIMENSION "E" IS CRIMP TUBE O.D.

BMR 500-2	240-2	225-2	205-2	195-2	*175-2	165-2	130-2	*125-2	100-2	PART NUMBER	DESCRIPTION	ITEM
								1		29-174-3	SHRINK TUBE	5
	1	1	1	1	1	1	1			29-174-2		
1										29-174-4		
									1	ATUM 3/8 BLK	DURABLE HEATSHRINK	
					1					06-1352-4	CONTACT	4
										-DELETED-		
								1	1	06-1352-2		
	1	1								06-296-8		
			1							06-296-18		
				1						06-296-12		
						1				06-296-10		
							1			06-296-4		
					1					29-100-49	CRIMP TUBE	3
1										29-100-92		
				1						29-100-74/29-100-4		
									1	29-100-26/29-174-3		
							1			29-140-4		
		1								29-100-12		
							1	1		29-140-2		
						1				29-138-2		
			1							29-137-2		
	1									29-100-63		
			1							41-324-2	BODY	2
				1						41-324-3		
								1		60-330-3		
					1					60-330-2		
1										60-330-1		
	1									41-324-4		
							1			41-324-1		
		1								41-324-6		
						1				41-324-5		
		1								15-469-17	INSULATOR(REAR)	1
	1		1							15-469-4		
				1		1				15-469-3		
							1			15-469-10		

PARTS LIST

MATERIAL	SCALE / SIZE B	DATE 09/05/2002	EMTEQ 5349 S. EMMER DRIVE NEW BERLIN, WI 53151 (888) 679-6170
FINISH	TOLERANCES UNLESS NOTED .XX = ± .03 .XXX = ± .010 ANGLES ± 1°	DRAWN L.LUGO	PLUG, BNC RIGHT ANGLE CONNECTOR
	CAD GENERATED AND MAINTAINED DRAWING -- DO NOT SCALE	DESIGNED	
		CHECKED V.LEX 08/20/2014	
		APPROVED K.BACHLEDA 08/20/2014	CAGE CODE 06WH3 / DWG # BMRXXX-2 / SHT 1 OF 1

FILE: BMRXXX-2.prt

NOTICE -- ALL CHANGES TO THIS DOCUMENT ARE CONTROLLED BY EMTEQ INC / UNLESS OTHERWISE STATED, ALL REPRODUCTIONS OF THIS DOCUMENT ARE NOT CONTROLLED BY EMTEQ INC