THIS DOCUMENT AND THE INFORMATION
IT CONTAINS IS THE PROPERTY OF EMTEQ INC.
AND MAY NOT BE USED IN ANY WAY WITHOUT
THE EXPRESS WRITTEN CONSENT OF EMTEQ INC.

REV	REVISION	DATE	ER #	INTL
IR	INITIAL RELEASE	03/26/2007	6737	LRL

DIMENSIONAL INFORMATION

PART NO.	"A"	"B"	"C"	"D"	CABLE INSTRUCTIONS
A49125-075-1	.583 (14.81)	.275 (6.99)	.195 (4.95)	.796 (20.22)	ES-105-37

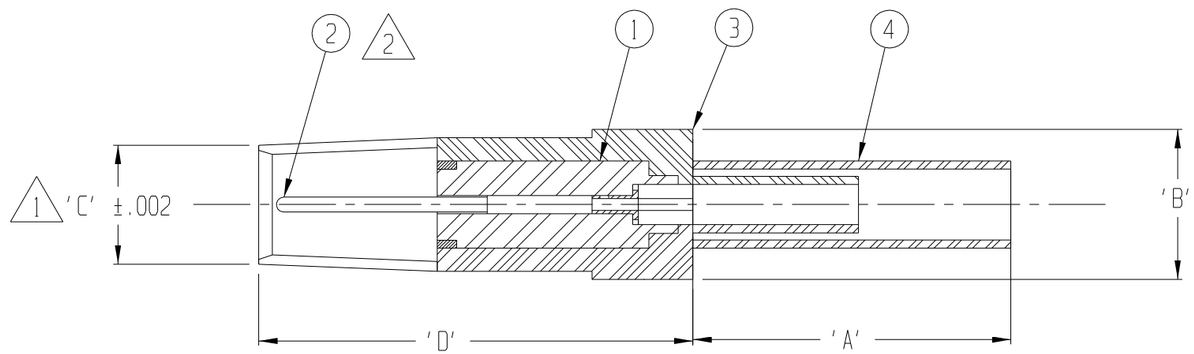

SPECIFICATIONS:

1) ELECTRICAL
   IMPEDANCE: 75 OHMS
   FREQUENCY RANGE: 0 TO 2 GHZ
   VOLTAGE RATING: 1,500 V RMS
   DIELECTRIC WITHSTANDING VOLTAGE: 1,500 V RMS
   INSULATION RESISTANCE: 5,000 MEGOHMS MIN

2) MECHANICAL
   TERMINATION STYLE: INNER CONTACT - SOLDER
   OUTER CONTACT - CRIMP
   TEMPERATURE RANGE: -55° C TO +125° C
   FINISHES:
   BODY FINISH: GOLD PLATED PER MIL-G-45204
   CONTACT FINISH: GOLD PLATED PER MIL-G-45204

   DESIGNED IN ACCORDANCE WITH ARINC 404 STANDARDS.

ASSEMBLY NOTES:

1. CLOSE INSIDE DIAMETER OF TINES TO DIMENSION SHOWN AFTER ASSMENBLY.

2. CONTACT SHOWN INSTALLED FOR REFERENCE ONLY. CONTACT TO BE SHIPPED LOOSE ALONG WITH CONNECTOR.

A49125-	075-1	PART NUMBER	DESCRIPTION	ITEM
	1	29-140-2	CRIMP TUBE	4
	1	09-208-2	BODY	3
2	1	06-955-2	CONTACT	2
	1	15-469-10	INSULATOR (PRE-ASSEMBLED WITH ITEM 2)	1

PARTS LIST

MATERIAL

FINISH

SCALE

SIZE B

TOLERANCES UNLESS NOTED
.XX = ± .03
.XXX = ± .010
ANGLES ± 1°

CAD GENERATED AND MAINTAINED DRAWING -- DO NOT SCALE

DATE 02/03/2004
DRAWN V. LEX
DESIGNED
CHECKED 03/27/2007 T.FORST
APPROVED 03/27/2007

EMTEQ
5349 S. EMMER DRIVE
NEW BERLIN, WI 53151
(888) 679-6170

75 OHM COAXIAL CONTACT
CRIMP PIN, SIZE 9

CAGE CODE 06WH3
DWG # A49125-075-1
SHT 1 OF 1

FILE: A49125-075-1.prt

NOTICE -- ALL CHANGES TO THIS DOCUMENT ARE CONTROLLED BY EMTEQ INC / UNLESS OTHERWISE STATED, ALL REPRODUCTIONS OF THIS DOCUMENT ARE NOT CONTROLLED BY EMTEQ INC